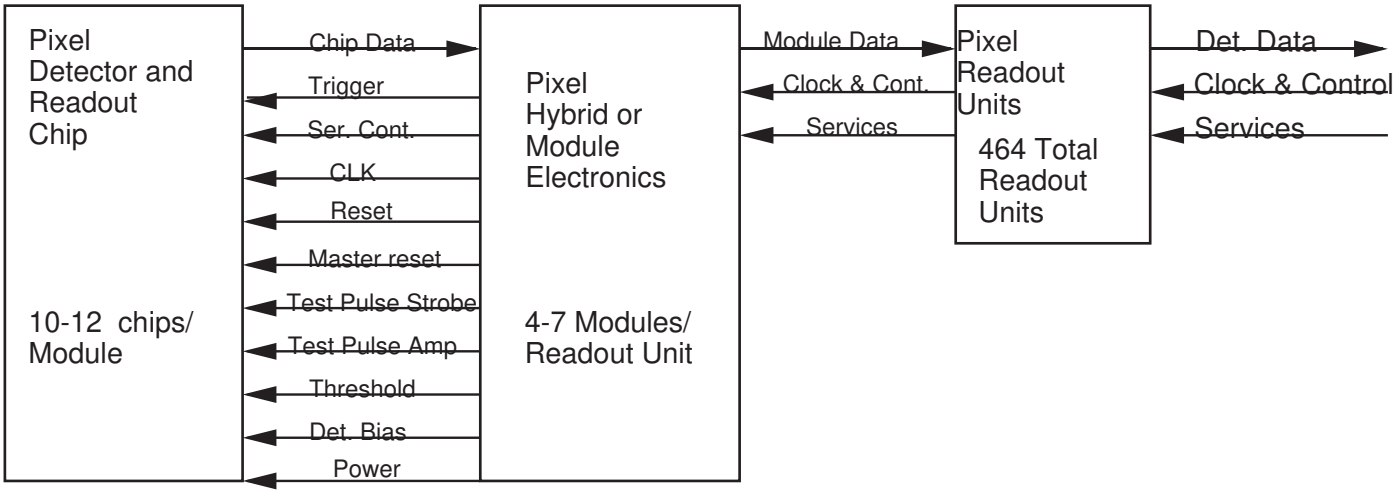On-detector Pixel Electronics