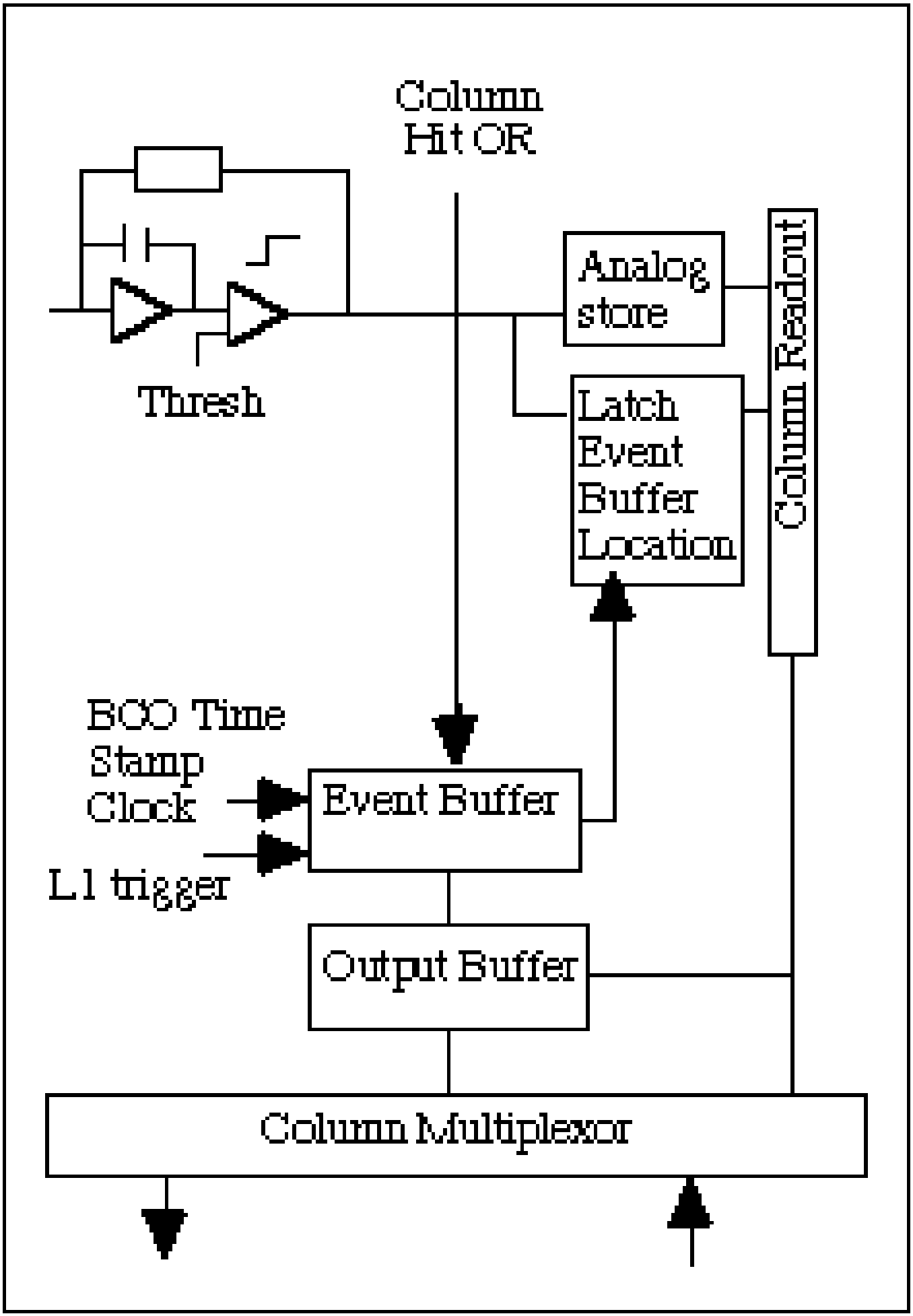
Column
Hit OR
Analog
store
Column Readout
Thresh
Latch
Event
Buffer
Location
BCO Time
Stamp
Clock
Event Buffer
L1 trigger
Output Buffer
Column Multiplexor