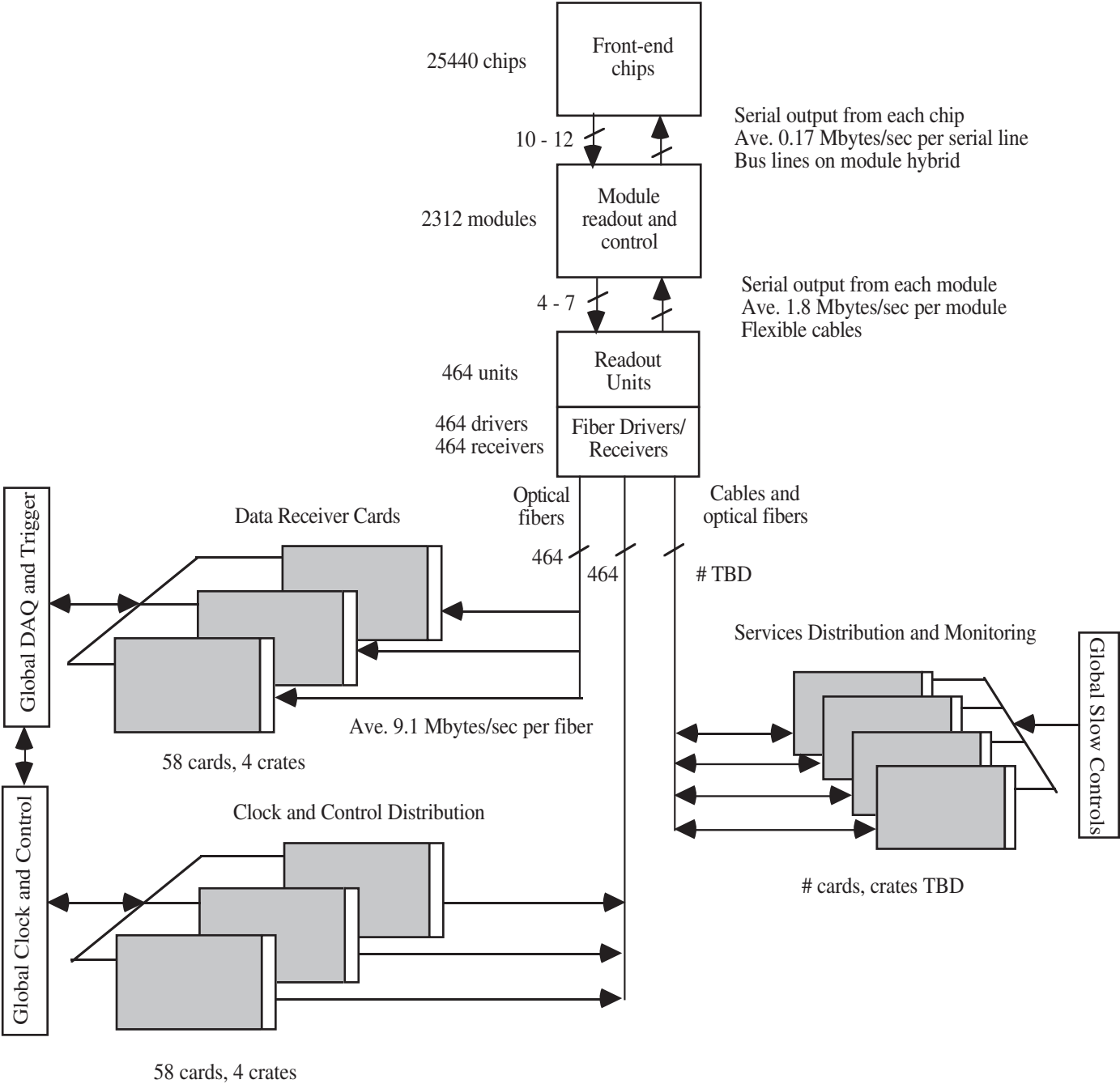
25440 chips
Front-end chips
10 - 12
Serial output from each chip
Ave. 0.17 Mbytes/sec per serial line
Bus lines on module hybrid
2312 modules
Module readout and control
4 - 7
Serial output from each module
Ave. 1.8 Mbytes/sec per module
Flexible cables
464 units
Readout Units
464 drivers
464 receivers
Fiber Drivers/ Receivers
Optical fibers
Cables and optical fibers
464
464
TBD
Global DAQ and Trigger
Data Receiver Cards
Ave. 9.1 Mbytes/sec per fiber
58 cards, 4 crates
Services Distribution and Monitoring
Global Slow Controls
cards, crates TBD
Global Clock and Control
Clock and Control Distribution
58 cards, 4 crates